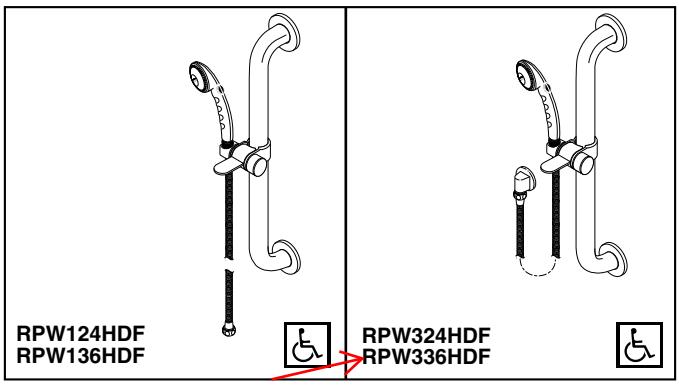

Submitted Model No.: _____

Specific Features: _____

DELTA COMMERCIAL

BATH VALVES

- Personal Hand Held Shower with Push Button On-Off Control–Not a Positive Shut Off
- Fixed Spray
- 69" (1753 mm) Double Spiral Metal Hose
- 24" (610 mm) & 36" (914 mm) Slide/Grab Bars
- ADA Adjustable Slide
- Atmospheric Vacuum Breaker (Models RPW324HDF and RPW336HDF only)
- 90° Wall Supply Elbow (Models RPW324HDF and RPW336HDF only)

COMPLIES WITH:

Indicates ADA compliance to ICC/ANSI A117.1

STANDARD SPECIFICATIONS:

- Personal white ABS hand held shower with fixed spray with push button on-off control–not a positive shut-off.
- 69" (1753 mm) double spiral metal hose.
- 24" (610 mm) and 36" (914 mm) stainless steel finish slide/grab bars.
- ADA compliant adjustable slide mechanism.
- Chrome plated atmospheric vacuum breaker, 1/2" IPS female inlet, 1/2"-14 NPSM male threaded outlet for exposed applications only. (Models RPW324HDF and RPW336HDF only).
- 90° chrome plated wall supply elbow, 1/2" IPS female inlet; 1/2"-14 NPSM male threaded outlet. (Models RPW324HDF and RPW336HDF only).
- 2.5 gpm @ 80 psi (9.5 L/min @ 552 kPa) from sprayhead.

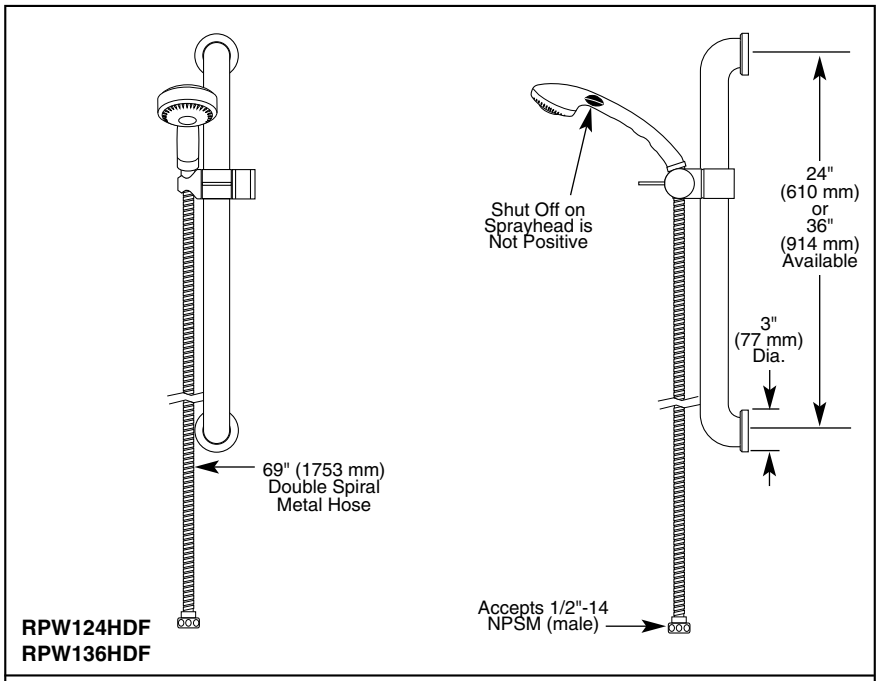

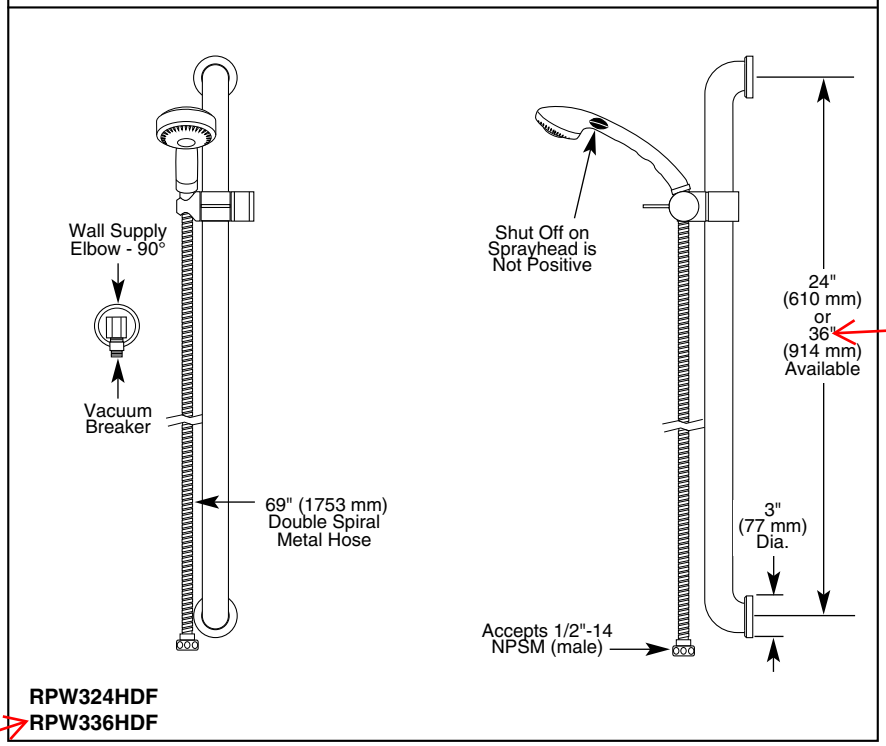

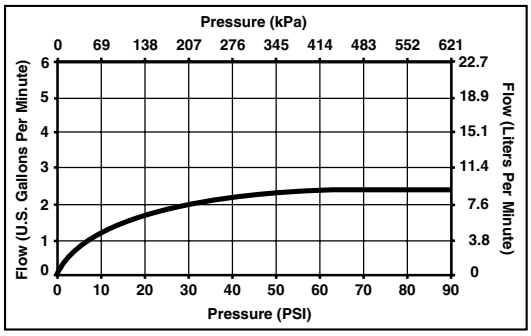

Delta reserves the right (1) to make changes in specifications and materials, and (2) to change or discontinue models, both without notice or obligation. Dimensions are for reference only.

Standard Features	RPW124HDF	RPW136HDF	RPW324HDF	RPW336HDF
Personal White ABS Hand Held Shower with Fixed Spray Push Button On-Off Control–Not a Positive Shut-Off	◆	◆	◆	◆
69" (1753 mm) Double Spiral Metal Hose	◆	◆	◆	◆
Chrome Plated Atmospheric Vacuum Breaker, 1/2" IPS Female Inlet, 1/2"-14 NPSM Male Threaded Outlet for Exposed Applications Only			◆	◆
90° Chrome Plated Wall Supply Elbow, 1/2" IPS Female Inlet, 1/2"-14 NPSM Male Threaded Outlet			◆	◆
24" (610 mm) Stainless Steel Wall Bar with Slide (allows for adjustable shower height)	◆		◆	
36" (914 mm) Stainless Steel Wall Bar with Slide (allows for adjustable shower height)		◆		◆
ADA Adjustable Slide Mechanism	◆	◆	◆	◆
2.5 gpm @ 80 psi (9.5 L/min @ 552 kPa) from Sprayhead	◆	◆	◆	◆

Available Options for Field Conversion:

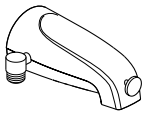

- Chrome plated pull-up diverter spout (for hand held shower only or tub and hand shower only applications), 1/2" or 3/4" IPS. Order RP3914.

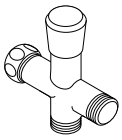

- Chrome plated brass shower arm diverter. Order RP32550.

DELTA COMMERCIAL

Indianapolis, Indiana 46280
A Division of Masco Corporation of Indiana
© 2002 Masco Corporation of Indiana